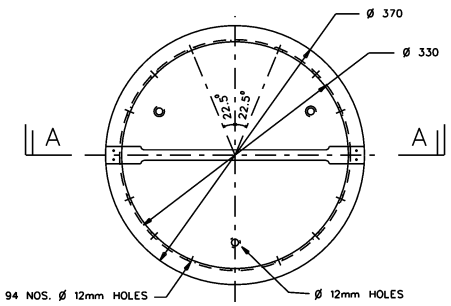

PLAN

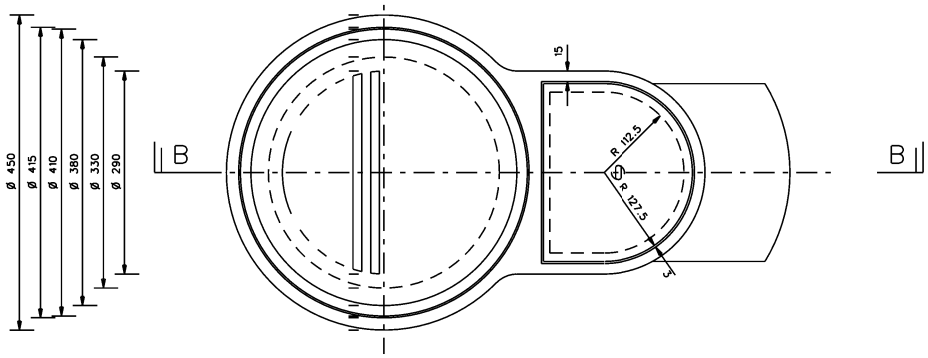

PLAN

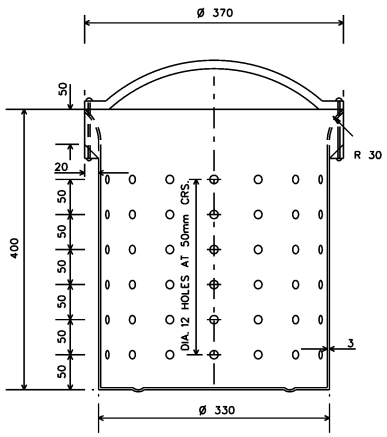

SECTION A - A

ALUMINIUM ALLOY STRAINER

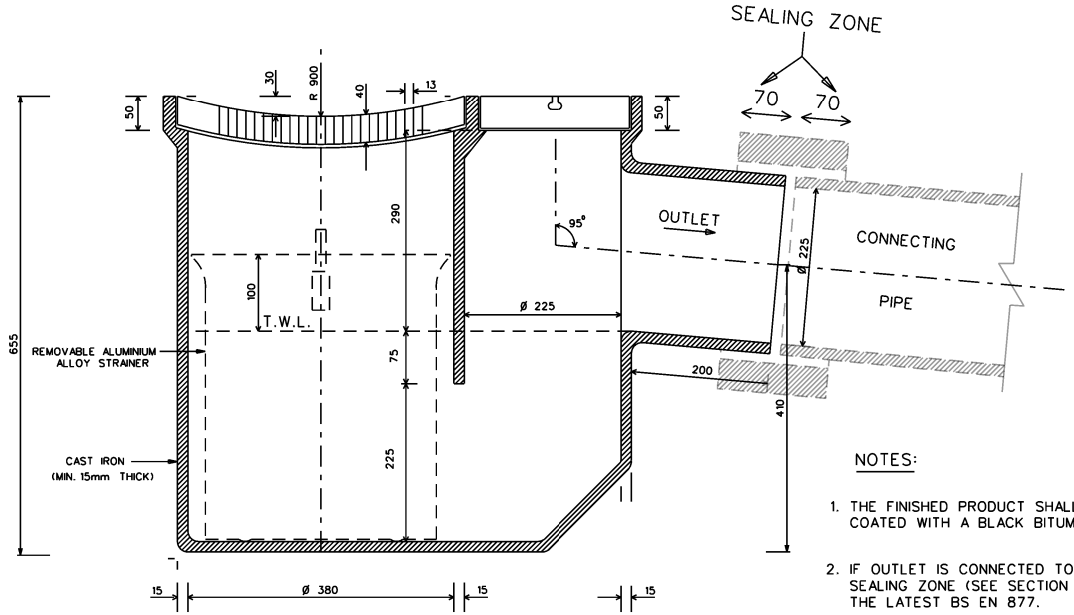

SECTION B - B

CAST IRON GULLY TRAP WITH ALUMINIUM ALLOY STRAINER

NOTES:

1. THE FINISHED PRODUCT SHALL BE SUPPLIED COATED WITH A BLACK BITUMINOUS COMPOSITION.
2. IF OUTLET IS CONNECTED TO A PIPE WITH SPIGOT END, SEALING ZONE (SEE SECTION B-B) SHALL COMPLY WITH THE LATEST BS EN 877.
3. THE STRAINER SHALL BE MADE OF CORROSION RESISTANT ALUMINIUM ALLOY.

ALL DIMENSIONS ARE IN mm.

ISSUED : DEC 2021	SCALES	CAST IRON GULLY TRAP FOR MARKETS	PUB SINGAPORE'S NATIONAL WATER AGENCY
LAST REVIEWED : NOV 2021	1 : 5		WATER RECLAMATION (NETWORK) DEPARTMENT
			DRG. NO. PUB/WRN/STD/045B

(ORIGINAL BORDER SIZE 575mm X 400mm)